Air Atomizing Nozzles

Product Guide

Delavan's Air Atomizing nozzles give you total control.

Tim Clarke
Technical Business Development
Application Specialist - Air Atomising

Precision Tested.
People Trusted.

DELAVAN®
SPRAY TECHNOLOGIES

Our nozzles come with technical expertise & training.

John Tilley
Production Operative

Delavan® Spray Technologies Continually Meeting the Challenges of New Industries and Markets.

Delavan® Spray Technologies, part of R.W. Beckett Corporation, is a world leader in the design and manufacture of high quality spray nozzles and fluid handling systems. Since the company was founded back in 1935, the Delavan® name has always stood for quality, flexibility, and reliability.

We Don't Just Supply the Nozzles...

Delavan's extensive experience goes beyond just the nozzle with a full range of engineered support for spray lances. Delavan® offers a variety of production services to best meet your needs. For new systems, we will handle each stage of development from preliminary design to servicing the product. Delavan® can also enhance current designs or simply manufacture products from existing designs. We can provide cooled or heated lances, support special mounting flanges, and bypass or purge systems to meet every industry standard.

DELAVAN®
SPRAY TECHNOLOGIES

Variable Coating Nozzle™

VCN™

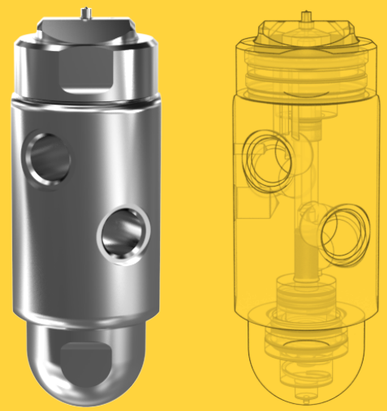

Optimized for control and accuracy for a variety of coating mediums.

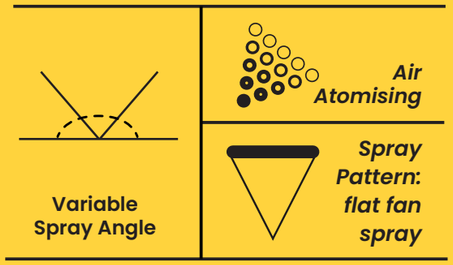

Our New VCN™ offers total Control

Delavan's Variable Coating Nozzle™ offers total control for demanding applications where control over a viscous media is required, including those in the pharmaceutical, food, and engineering industries. The VCN's design allows the width of the spray, the atomizing air, and the flow of the liquid all to be controlled independently and remotely. The specially designed Air Cap reduces the build up of product, enabling longer production runs with reduced maintenance.

Total Droplet Control

- **Consistency –** Each VCN™ produces the same droplet spectrum throughout the run, every run.
  Accuracy – Our technical expertise guarantees a closely controlled droplet spectrum.
- **Adaptability –** The VCN™ Unit is available in sizes ranging from 0.8 to 2.5mm and will cope with a wide variety of coating media.

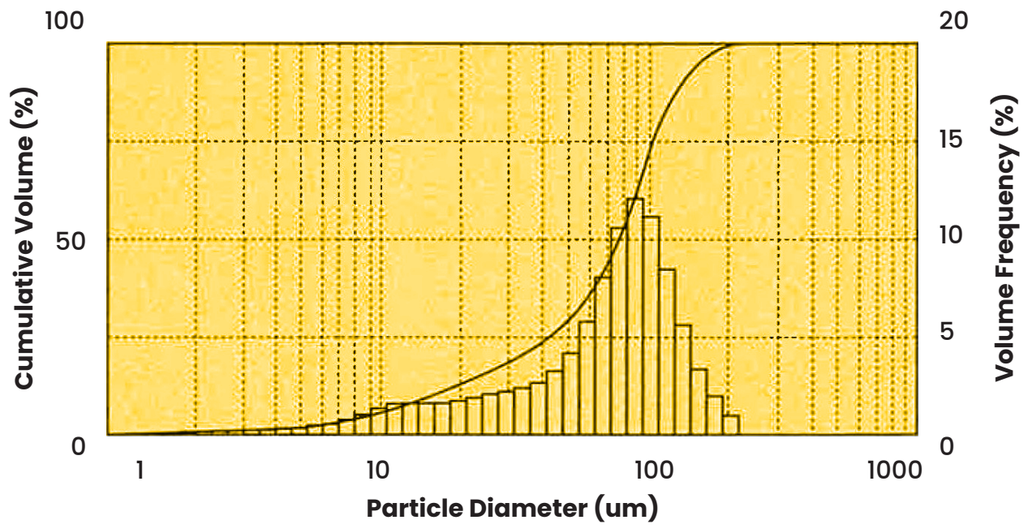

This graph shows the control and accuracy of the VCN's droplet spectrum. This graph was generated an a Malvern Instruments. Insitec laser diffraction droplet analyser. The Delavan VCN™ was spraying a typical tablet coating medium with a viscosity of approximately 200 cP.

Variable Coating Nozzle Features

Quality Assurance & Certification

Inspection

- All parts are manufactured on our world class CNC machinery and inspected at every stage of manufacture in our ISO9001 manufacturing facility.
- Every complete unit is tested and individually serial numbered prior to dispatch.

Characterization Certificate

- Full Material Traceability is ensured throughout manufacturing process.
- Droplet size characterization data can be provided on a Spray performance and velocity

Liquid Shut Off

- The flow of the liquid can be shut off automatically to avoid dripping.
- A special shut off sealing kit is available for use with low viscosity liquids

Variable Spray Width

- Optimizes the wetted area.
- Minimizes the risk of localized over-wetting.
- Maintains the optimum internozzle distance for all common coating media.
- Remotely controllable and is easy to adjust either manually, via a pressure regulator, or automatically from a control panel.
- Setting is uniform between nozzles and consistent each time the nozzle is operated – ideal for repeatable, automatic control in a multi-nozzle configuration.
- Low air consumption minimizes running costs.

Cleaning & Service

- Special Anti Bearding Air Cap design reduces build up of coating material during the run.
- Compact aerodynamic design reduces disturbance of the rotating air in the drum, giving more coating media on the product, resulting in less cleaning and wastage.
- Rapid strip-down and reassembly saves time between batches.
- Push-in connectors eliminate the need for special tools.
- Clearly marked ports speed up reconnection and reduce operator error.
- All parts can be ultrasonically cleaned.
- New design avoids entrapment of dirt and organisms.
- All wetted metal parts are 316 Stainless Steel.
- Seals can be provided in a number of FDA approved materials to suit various coating media.
- No additional parts required for inter-connection – comes complete with push-in connectors.

Potential Process Time Saving Using High Solids Coating System

Process Parameter	HPMC-Based Coating Liquids @ 15% w/w Solids	Copovidone-based Coating Liquids @ 20% w/w Solids[a]	Copovidone-based Coating Liquids @ 25% w/w Solids[a]
VCN™	Delavan VCN™ x 3	Delavan VCN™ x 3	Delavan VCN™ x 3
Pan Loading	170	170	170
Gun To Bed Distance (cm)	28	28	28
Pan Speed (rpm)	5	7	6
Process Air Volume			
(m^3/h^{-1})	2200	2300	2300
(cfm)	1300	1350	1350
Inlet Air Dewpoint (°C)	10 to 13	10 to 13	10 to 13
Inlet Air Temperature (°C)	60	65	65
Tablet Bed Temperature (°C)	39	40	42
Exhaust-air Temperature (°C)	45	49	50
Atomizing-air Pressure (bar)	2.5	2.5	2.5
Pattern-air Pressure (bar)	2	3.5	3.5
Spray Rate (grams per min^{-1})	315	388	380
Amount of Coating Suspension Applied (kg)	36.2	31.4	25.2
Coating Process Time (min)	115	81	66
Process Time Savings (%)	-	30	43

AL Series Atomising Nozzles

AL

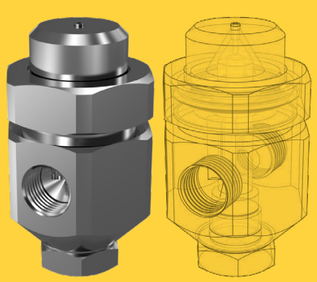

Multiple option fed external mix solid cone spray nozzle. Allows control of the atomization without changing liquid flow.

Spray Angle
20˚ - 25˚

Air Atomising

Spray Pattern: Solid Cone

AL 15

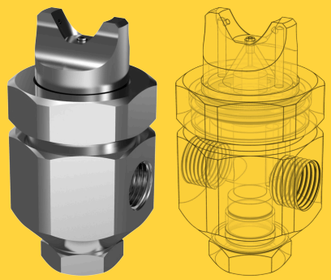

An external mix, flat fan spray nozzle where a change in air or liquid pressure will result in a change of flow or atomization.

Spray Angle
45˚ - 60˚

Air Atomising

Spray Pattern: Flat Fan

AL 30

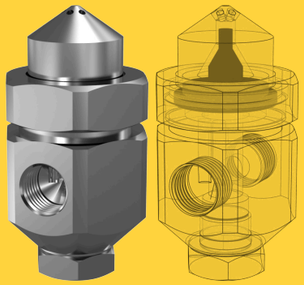

Pressure-fed internal mix solid cone spray nozzle. Allows control of the atomization without changing liquid flow.

Spray Angle
70˚

Air Atomising

Spray Pattern: Solid Cone

AL 45

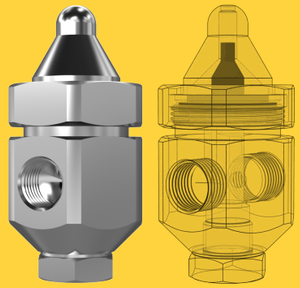

Pressure-fed internal mix solid cone spray nozzle. Where change in air or liquid pressure will result in a change of flow or atomization.

Spray Angle
15˚ - 20˚

Air Atomising

Spray Pattern: Solid Cone

AL 60

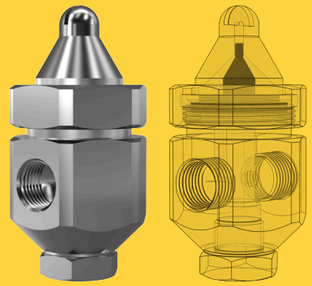

Pressure-fed internal mix flat fan spray nozzle. Where change in air or liquid pressure will result in a change of flow or atomization.

Spray Angle
90˚ - 110˚

Air Atomising

Spray Pattern: Flat Fan

AL Series Body Styles

AL Series nozzles are available in different body syles to fit your application process

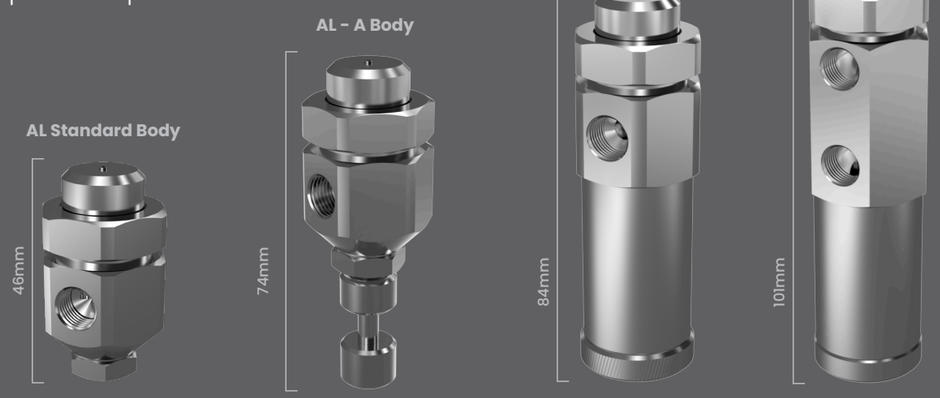

DELAVAN SPRAY TECHNOLOGIES

AL External Mix

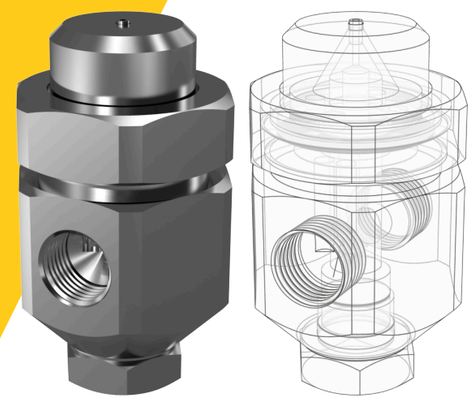

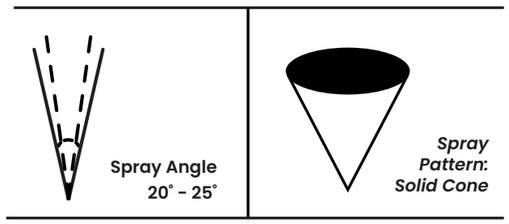

The Delavan AL air atomizing series spray nozzles offer the user a wide variety of spray patterns, flow rates and atomization. Unlike hydraulic or pressurized nozzles where the energy from the pressure of the liquid is used to atomize, the AL series of nozzles use the energy or a pressurized gas (typically air) to atomize the liquid. This allows the liquid to be fed under lower pressure and still achieve fine atomisation. This is also advantageous for abrasive or high viscosity liquids.

Standard AL Siphon

Metering Set Number	Capacities at Siphon Height of 15cm	Air Pressure in Bar G										Spray Angle (°)@15 Bar
		0.35	0.70	1.00	1.50	1.75	2.00	3.00	4.00	6.00	7.00	
AL-01	Air Capacity Liters/Min Liq. Capacity Liters/Hr	15 1.36	20 2.27	23 3.12	29 3.41	32 3.72	35 4.08	44 4.64	58 5.90	78 7.10	91 8.30	20
AL-02	Air Capacity Liters/Min Liq. Capacity Liters/Hr	26 2.50	32 4.54	38 5.90	47 7.00	52 7.90	58 9.10	73 10.70	96 13.60	126 16.60	151 19.50	20
AL-03	Air Capacity Liters/Min Liq. Capacity Liters/Hr	33 3.18	42 5.40	49 7.30	60 8.90	67 10.20	75 11.80	94 14.80	125 20.90	164 26.80	195 32.70	20
AL-04	Air Capacity Liters/Min Liq. Capacity Liters/Hr	43 3.63	54 6.40	63 8.60	77 10.70	86 12.50	96 14.10	120 17.50	162 24.10	210 30.90	250 37.70	20
AL-05	Air Capacity Liters/Min Liq. Capacity Liters/Hr	49 4.22	61 7.40	71 10.00	86 12.40	97 14.50	108 16.40	135 20.30	182 28.00	236 35.90	281 43.80	20

Standard AL Gravity Fed

Metering Set Number	Atomising Air		Liquid Capacity L/Hr Gravity Fed				Liquid Capacity L/Hr Siphon Height				Spray Angle
	Air Press. Bar.G.	Air Flow L/Min	10 cm	15 cm	30 cm	45 cm	20 cm	30 cm	60 cm	90 cm	
AL-06	0.70 1.50 3.00 4.00	11.30 17.00 28.00 36.00	0.87 1.30 1.50 1.60	1.10 1.50 1.70 1.80	1.30 1.70 1.90 2.00	1.50 1.80 2.10 2.20	0.68 1.20 1.40 1.50	0.53 1.10 1.30 1.40	- 0.62 1.10 1.20	- - 0.76 0.87	18 18 18 18
AL-07	0.70 1.50 3.00 4.00	13.30 20.00 32.00 41.00	1.50 2.10 2.80 3.10	1.70 2.40 2.90 3.30	2.10 2.60 3.10 3.40	2.40 2.80 3.40 3.70	1.20 1.90 2.60 2.90	0.79 1.60 2.40 2.70	- 0.91 1.70 2.10	- - 1.10 1.50	18 18 18 19
AL-08	0.70 1.50 3.00 4.00	23.00 36.00 58.00 74.00	1.60 2.20 2.90 3.40	2.00 2.50 3.20 3.50	2.30 2.80 3.30 3.60	2.50 2.90 3.40 3.70	1.40 2.00 2.80 3.30	1.10 1.70 2.50 3.00	- 0.89 1.90 2.50	- - 1.20 2.00	18 18 19 20
AL-09	0.70 1.50 3.00 4.00	23.00 31.00 50.00 65.00	1.60 3.50 4.40 4.20	2.00 4.40 5.00 5.00	2.30 4.90 5.60 5.40	2.50 5.30 6.00 5.70	1.40 2.90 4.00 3.90	1.10 3.50 3.40 3.50	- 2.80 2.40 2.80	- 1.90 1.20 1.90	21 22 21 22
AL-10	1.50 3.00 4.00 5.60	58.00 88.00 111.00 147.00	12.30 16.70 18.40 19.70	16.30 19.50 21.00 22.00	19.90 23.00 24.00 24.00	22.00 25.00 26.00 26.00	10.50 14.20 15.70 17.00	8.30 11.50 12.90 14.60	2.80 6.40 7.90 9.80	- 2.80 4.50 6.10	17 18 18 19
AL-11	2.00 3.00 4.00 5.60	144.00 190.00 240.00 315.00	27.00 30.00 31.00 31.00	- - 40.00 39.00	- - 43.00 42.00	- - - 44.00	22.00 26.00 28.00 28.00	16.80 21.00 23.00 24.00	- - 11.00 16.70	- - - 8.30	20 20 21 22

AL 15 – External Mix

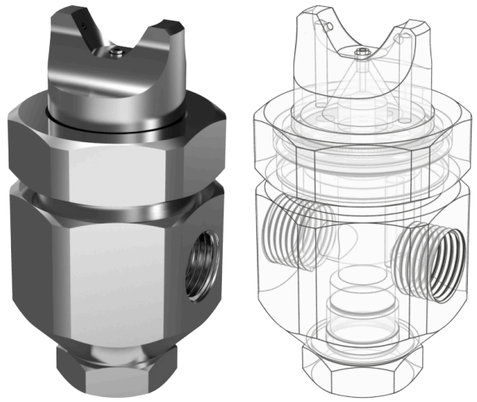

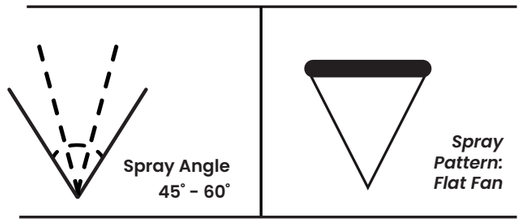

The AL 15 series is a pressure-fed external mix flat fan spray nozzle. The external mix feature allows control of the atomization without changing liquid flow. The lighter the air pressure, the higher the atomization for a given liquid pressure. The spray pattern is a function of pressure. The higher the air pressure, the longer the spray pattern.

AL 15 Siphon / Gravity Fed

Metering Set	Liquid Tip & Aircap	Capacities as Siphon Height of 15 cm	Air Pressure in Bar. G.										Spray Angle at 1.5 BAR
			0.4	0.7	1.0	1.5	1.75	2.0	3.0	4.0	6.0	7.0	
15-01	LIQUID TIP W05736-1 AIRCAP W01234-1	Air Capacity Liters/Min Liq. Capacity Liters/Min	40.00 1.36	51.00 2.27	54.00 3.12	57.00 3.41	62.00 3.72	66.00 4.08	74.00 4.64	88.00 5.90	95.00 7.10	108.00 8.30	45
15-02	LIQUID TIP W05736-2 AIRCAP W01234-2	Air Capacity Liters/Min Liq. Capacity Liters/Min	44.00 2.50	57.00 4.54	64.00 5.90	71.00 7.00	75.00 7.90	79.00 9.10	89.00 10.70	105.00 13.60	113.00 16.60	122.00 19.50	50
15-03	LIQUID TIP W05736-3 AIRCAP W01234-3	Air Capacity Liters/Min Liq. Capacity Liters/Min	54.00 3.18	68.00 5.40	78.00 7.30	85.00 8.90	94.00 10.20	99.00 11.80	110.00 14.80	127.00 20.90	139.00 26.80	151.00 32.70	55
15-04	LIQUID TIP W05736-4 AIRCAP W01234-4	Air Capacity Liters/Min Liq. Capacity Liters/Min	57.00 3.63	78.00 6.40	89.00 8.60	99.00 10.70	108.00 12.50	116.00 14.10	127.00 17.50	153.00 24.10	163.00 30.90	177.00 37.70	60
15-05	LIQUID TIP W05736-5 AIRCAP W01234-5	Air Capacity Liters/Min Liq. Capacity Liters/Min	63.00 4.22	85.00 7.40	97.00 10.00	108.00 12.40	119.00 14.50	128.00 16.40	142.00 20.30	173.00 28.00	189.00 35.90	208.00 43.80	60

AL 15 – External Mix

AL 15 Siphon Pump Fed

Liquid Pressure Bar. G.

Metering Set	Liquid Tip & Aircap	0.2 Bar			0.3 Bar			0.7 Bar			1.5 Bar			3.0 Bar		
		Air Press. BAR	Air L/Min	Liquid L/Hr	Air Press. BAR	Air L/Min	Liquid L/Hr	Air Press. BAR	Air L/Min	Liquid L/Hr	Air Press. BAR	Air L/Min	Liquid L/Hr	Air Press. BAR	Air L/Min	Liquid L/Hr
15-06	LIQUID TIP W13154-1 AIRCAP W13159-1	0.20 0.35 0.70 1.05 1.40 1.75 2.10	25.20 26.30 31.20 39.60 45.30 53.80 59.40	2.80	0.35 0.70 1.05 1.40 1.75 2.10 2.80	26.30 31.20 39.60 45.30 53.80 59.40 73.60	3.50	0.70 1.05 1.40 1.75 2.10 2.80 3.50	31.20 39.60 45.30 53.80 59.40 73.60 85.00	5.30	1.40 1.75 2.10 2.80 3.50 4.20 5.60	45.30 53.80 59.50 73.60 85.00 102.00 139.00	7.80	2.80 3.50 4.20 4.90 5.30 5.60 6.30	73.60 85.00 102.00 119.00 127.50 139.00 159.00	11.00
15-07	LIQUID TIP W13154-1 AIRCAP W13159-2	0.35 0.40 0.50 0.60	22.00 25.00 27.50 28.00	2.80	0.35 0.40 0.60 0.70	22.00 25.00 28.00 34.00	3.50	0.40 0.60 0.70 0.85	25.00 28.00 34.00 40.00	5.30	0.60 0.70 1.10 1.40	28.00 34.00 45.00 54.00	7.80	0.70 1.10 1.80 2.50	34.00 45.00 62.00 79.00	11.00
15-08	LIQUID TIP W13154-2 AIRCAP W13159-1	0.35 0.70 1.05 1.40 1.75 2.10 2.80	26.30 31.20 39.60 45.30 53.80 59.40 73.60	4.50	0.70 1.05 1.40 1.75 2.10 2.80 3.50	31.20 39.60 45.30 53.80 59.40 73.60 85.00	5.50	1.05 1.40 1.75 2.10 2.80 3.50 4.20	39.60 45.30 53.80 59.40 73.60 85.00 102.00	8.30	1.75 2.10 2.80 3.50 4.20 4.90 6.30	53.80 59.40 73.60 85.00 102.00 119.00 159.00	12.20	3.15 3.50 4.20 4.90 5.25 6.30 6.70	82.00 85.00 102.00 119.00 127.00 159.00 164.00	16.60
15-09	LIQUID TIP W13154-2 AIRCAP W13159-2	0.35 0.60 0.70 1.10	22.00 28.00 34.00 45.00	4.50	0.35 0.70 1.10 1.40	22.00 34.00 45.00 54.00	5.50	0.60 0.70 1.40 2.10	28.00 34.00 54.00 71.00	8.30	0.70 1.40 2.10 2.50	34.00 54.00 71.00 79.00	12.20	1.10 1.40 2.10 2.50	45.00 54.00 71.00 79.00	17.20
15-10	LIQUID TIP W13154-3 AIRCAP W13159-1	0.70 1.05 1.40 1.75 2.10 2.80 3.50	31.20 39.60 45.30 53.80 59.40 73.60 85.00	8.50	1.05 1.40 1.75 2.10 2.80 3.50 4.20	39.60 45.30 53.80 59.40 73.60 85.00 102.00	10.40	1.40 1.75 2.10 2.80 3.50 4.20 4.90	45.30 53.80 59.40 73.60 85.00 102.00 119.00	15.90	2.50 2.80 3.50 4.20 4.90 5.60 6.30	68.00 73.60 85.00 102.00 119.00 139.00 159.00	23.00	3.50 4.20 4.90 5.30 5.60 6.30 7.00	85.00 102.00 119.00 127.00 139.00 159.00 176.00	33.00
15-11	LIQUID TIP W13154-3 AIRCAP W13159-2	0.40 0.50 0.60 0.70	25.00 27.50 28.00 34.00	8.50	0.40 0.60 0.65 0.70	25.00 28.00 31.00 34.00	10.40	0.40 0.60 0.70 0.85	25.00 28.00 34.00 40.00	15.90	0.70 0.85 1.10 1.40	34.00 40.00 45.00 54.00	23.00	1.40 1.80 2.10 2.50	54.00 62.00 71.00 79.00	33.00
15-12	LIQUID TIP W13154-4 AIRCAP W13159-3	0.70 1.00 1.40 1.80 2.10 2.80 3.50	85.00 102.00 116.00 139.00 156.00 195.00 227.00	13.40	1.00 1.40 1.80 2.10 2.80 3.50 4.20	102.00 116.00 139.00 156.00 195.00 227.00 266.00	16.40	1.40 1.80 2.10 2.50 2.80 3.70 4.20	116.00 139.00 156.00 178.00 195.00 227.00 266.00	25.00	2.50 2.80 3.50 4.20 4.90 5.60 6.30	178.00 195.00 227.00 266.00 312.00 360.00 411.00	37.00	3.20 3.50 3.90 4.20 4.90 5.60 6.30	212.00 232.00 255.00 275.00 314.00 360.00 411.00	52.00

AL 15 Siphon Pump Fed

Liquid Pressure Bar. G.

Metering Set	Liquid Tip & Aircap	0.2 Bar			0.3 Bar			0.7 Bar			1.5 Bar			3.0 Bar		
		Air Press. BAR	Air L/Min	Liquid L/Hr	Air Press. BAR	Air L/Min	Liquid L/Hr	Air Press. BAR	Air L/Min	Liquid L/Hr	Air Press. BAR	Air L/Min	Liquid L/Hr	Air Press. BAR	Air L/Min	Liquid L/Hr
15-13	LIQUID TIP W13154-4 AIRCAP W13159-4	0.60 0.70 1.10 1.40	91.00 102.00 130.00 156.00	13.40	0.70 1.10 1.80 2.10	102.00 130.00 184.00 210.00	16.40	1.40 2.10 2.50 2.80	156.00 210.00 235.00 260.00	25.00	2.10 2.80 3.50 4.20	210.00 260.00 310.00 360.00	37.00	3.20 4.20 5.30 5.60	285.00 360.00 430.00 455.00	52.00
15-14	LIQUID TIP W13154-5 AIRCAP W13159-3	0.70 1.00 1.40 1.80 2.10 2.80 3.50	85.00 102.00 116.00 139.00 156.00 195.00 227.00	17.60	1.40 1.80 2.10 2.50 2.80 3.50 4.20	116.00 139.00 156.00 178.00 195.00 227.00 266.00	22.00	1.80 2.10 2.50 2.80 3.50 4.20 4.90	139.00 156.00 178.00 195.00 227.00 226.00 312.00	33.00	2.80 3.20 3.50 4.20 4.90 5.60 6.30	195.00 212.00 227.00 266.00 312.00 360.00 411.00	48.00	3.50 4.20 4.90 5.30 5.60 6.30 6.60	232.00 275.00 314.00 340.00 340.00 411.00 428.00	68.00
15-15	LIQUID TIP W13154-5 AIRCAP W13159-4	0.60 1.10 1.40 1.80	91.00 130.00 156.00 184.00	17.60	0.70 1.40 1.80 2.10	102.00 156.00 184.00 210.00	22.00	1.10 1.80 2.50 2.80	130.00 184.00 235.00 260.00	33.00	2.50 3.20 3.90 4.20	235.00 285.00 330.00 360.00	48.00	3.50 4.60 6.00 6.70	310.00 380.00 475.00 525.00	68.00
15-16	LIQUID TIP W13154-6 AIRCAP W13159-4	0.70 1.10 1.40 1.80	102.00 130.00 156.00 184.00	36.00	1.10 1.40 2.10 2.50	130.00 156.00 210.00 235.00	45.00	1.80 2.10 2.80 3.20	184.00 210.00 260.00 285.00	68.00	3.20 3.50 4.90 5.90	285.00 310.00 405.00 455.00	100.00	5.30 6.00 6.70 7.00	430.00 475.00 525.00 550.00	141.00
15-17	LIQUID TIP W13154-6 AIRCAP W13159-3	1.00 1.40 1.80 2.10 2.50 2.80 3.50	102.00 116.00 139.00 156.00 178.00 195.00 227.00	36.00	1.80 2.10 2.50 2.80 3.20 3.50 4.20	139.00 156.00 178.00 195.00 212.00 227.00 266.00	45.00	2.50 2.80 3.20 3.50 4.20 4.90 5.60	178.00 195.00 212.00 227.00 266.00 312.00 360.00	68.00	3.20 3.50 3.90 4.20 4.90 5.60 6.30	212.00 227.00 246.00 266.00 312.00 360.00 411.00	100.00	3.90 4.20 4.60 4.90 5.60 6.30 7.00	255.00 275.00 297.00 314.00 360.00 411.00 453.00	141.00
15-18	LIQUID TIP W13154-8 AIRCAP W13159-5	1.80 2.10 2.50 2.80 3.20 3.50 4.20	235.00 260.00 300.00 330.00 355.00 380.00 445.00	36.00	1.80 2.10 2.50 2.80 3.20 3.50 4.20	235.00 260.00 300.00 330.00 355.00 380.00 455.00	45.00	2.50 2.80 3.20 3.50 3.90 4.20 4.90	300.00 330.00 355.00 380.00 410.00 445.00 520.00	68.00	3.90 4.20 4.60 4.90 5.30 5.60 6.30	410.00 445.00 480.00 529.00 565.00 600.00 685.00	100.00			
15-19	LIQUID TIP W13154-9 AIRCAP W13159-5	2.10 2.50 2.80 3.20 3.50 4.20 4.90	260.00 300.00 330.00 355.00 380.00 445.00 520.00	64.00	2.80 3.20 3.50 3.90 4.20 4.90 5.60	330.00 355.00 380.00 410.00 445.00 520.00 600.00	78.00	3.90 4.20 4.60 4.90 5.30 5.60 6.30	410.00 445.00 480.00 520.00 565.00 600.00 685.00	119.00	4.90 5.30 5.60 6.00 6.30	520.00 565.00 600.00 640.00 685.00	175.00			
15-20	LIQUID TIP W13154-10 AIRCAP W13159-5	2.80 3.20 3.50 3.90 4.20 4.60 4.90	330.00 355.00 380.00 410.00 445.00 480.00 520.00	102.00	3.50 3.50 4.20 4.60 4.90 5.30 5.60	380.00 410.00 445.00 480.00 520.00 565.00 600.00	125.00	4.60 4.90 5.30 5.60 6.00 6.30	480.00 520.00 565.00 600.00 640.00 685.00	192.00	5.60 6.00 6.30	600.00 640.00 685.00	280.00			

AL 30 – Internal Mix

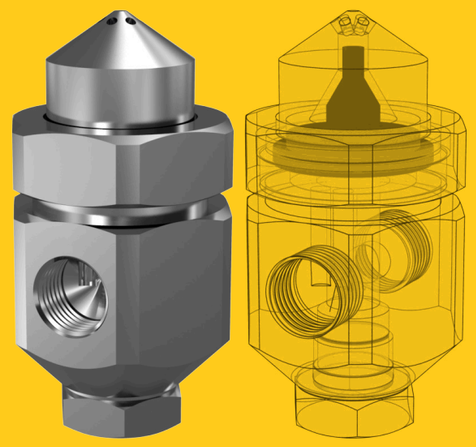

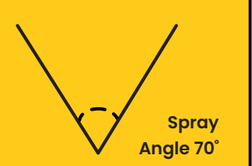

Spray Pattern: solid cone

The AL 30 series produces a wide, round spray pattern with a nominal angle of 70º. This is an internal mix nozzle, where a change in air or liquid pressure will result in a change of flow or atomization. Increasing air pressure decreases flow and increases atomization. Increasing liquid pressure increases flow and decreases atomization.

AL 30 Wide Angle Internal Mix

Metering Set	Liquid Tip & Aircap	Liquid Pressure Bar. G.														
		0.7 Bar			1.5 Bar			2.0 Bar			3.0 Bar			4.0 Bar		
		Air Press. BAR	Air L/Min	Liquid L/Hr	Air Press. BAR	Air L/Min	Liquid L/Hr	Air Press. BAR	Air L/Min	Liquid L/Hr	Air Press. BAR	Air L/Min	Liquid L/Hr	Air Press. BAR	Air L/Min	Liquid L/Hr
30-01	LIQUID TIP W13154-2 AIRCAP W13157-1	0.6	10.2	5.3	1.1	13.3	8.1	1.5	16.4	8.1	2.4	22.0	8.9	3.1	24.0	10.5
		0.7	12.2	4.3	1.3	15.0	7.0	1.8	21.0	6.6	2.7	26.0	8.1	3.4	28.0	9.7
		0.9	14.2	3.0	1.4	17.0	6.4	2.1	25.0	4.9	3.0	30.0	6.4	3.9	36.0	7.8
		1.0	17.0	1.7	1.5	19.0	5.5	2.4	29.0	3.2	3.2	34.0	4.9	4.2	42.0	6.1
					1.7	22.0	4.5				3.4	37.0	4.2	4.6	47.0	4.4
					1.8	24.0	3.5				3.5	40.0	3.4	4.9	54.0	2.8
30-02	LIQUID TIP W13154-5 AIRCAP W13157-3	0.9	50.0	7.0	1.7	68.0	13.2	2.0	68.0	18.5	2.8	84.0	25.0	3.7	96.0	31.0
		1.0	62.0	2.1	1.8	79.0	9.8	2.1	76.0	15.1	3.0	92.0	22.0	3.8	105.0	28.0
								2.2	85.0	11.7	3.1	101.0	18.5	3.9	113.0	26.0
											3.2	109.0	15.1	4.1	122.0	23.0
											3.4	119.0	12.1	4.2	130.0	20.0
											3.5	130.0	9.1	4.6	153.0	13.6
											3.7	142.0	6.1	4.9	183.0	6.8
30-03	LIQUID TIP W13154-6 AIRCAP W13157-3	0.7	32.0	24.0	1.4	37.0	43.0	2.1	66.0	33.0	2.8	65.0	52.0	3.7	68.0	63.0
		0.9	44.0	13.6	1.5	49.0	35.0	2.2	78.0	26.0	3.0	76.0	46.0	3.8	79.0	58.0
		1.0	57.0	7.6	1.7	61.0	28.0	2.4	89.0	18.9	3.1	87.0	39.0	3.9	101.0	52.0
					1.8	71.0	21.0	2.5	100.0	11.7	3.2	99.0	33.0	4.2	111.0	41.0
											3.4	110.0	26.0	4.6	138.0	27.0
											3.5	122.0	19.5	4.9	166.0	16.0
											3.7	133.0	13.2			
30-04	LIQUID TIP W13154-6 AIRCAP W13157-4	1.3	85.0	36.0	2.1	116.0	57.0	3.1	156.0	53.0	4.2	197.0	64.0	5.6	245.0	74.0
		1.5	102.0	29.0	2.4	130.0	51.0	3.2	163.0	50.0	4.9	230.0	51.0	6.0	260.0	68.0
		1.8	117.0	23.0	2.7	143.0	45.0	3.4	170.0	47.0	5.6	265.0	40.0	6.3	280.0	62.0
		2.0	125.0	19.7	3.0	157.0	39.0	3.5	177.0	45.0	6.0	285.0	34.0	6.7	295.0	56.0
		2.1	133.0	16.7	3.2	170.0	33.0	3.9	194.0	38.0	6.3	300.0	28.0	7.0	315.0	51.0
		2.3	142.0	14.0	3.5	185.0	28.0	4.6	230.0	25.0	6.7	320.0	22.0			
		2.4	149.0	11.4	4.2	220.0	13.6	4.9	245.0	18.5	7.0	335.0	17.8			
30-05	LIQUID TIP W13154-5 AIRCAP W13157-2	1.1	40.0	12.3	2.2	62.0	16.3	2.7	69.0	21.0	4.2	100.0	19.3	5.6	130.0	22.0
		1.3	45.0	9.9	2.5	71.0	12.1	3.0	78.0	16.3	4.6	113.0	14.6	6.0	142.0	17.6
		1.4	50.0	7.9	2.8	79.0	8.9	3.2	86.0	12.3	4.9	124.0	10.8	6.3	152.0	14.0
		1.5	54.0	6.1	3.0	83.0	7.6	3.4	91.0	10.7	5.3	135.0	8.1	6.7	163.0	11.4
		1.7	58.0	4.9	3.1	87.0	6.4	3.5	94.0	9.3	5.6	146.0	6.2	7.0	174.0	9.1
		1.8	62.0	3.9	3.2	91.0	5.5	3.9	105.0	6.4	6.0	157.0	4.9			
		2.0	67.0	3.1	3.4	95.0	4.7	4.2	115.0	4.7	6.3	167.0	4.0			
30-06	LIQUID TIP W13154-10 AIRCAP W13157-5	1.7	156.0	25.0	3.0	230.0	39.0	3.4	250.0	50.0	4.6	320.0	62.0	6.0	395.0	93.0
		1.8	167.0	19.7	3.1	240.0	33.0	3.5	260.0	43.0	4.9	345.0	47.0	6.3	425.0	77.0
		2.0	178.0	15.1	3.2	255.0	27.0	3.7	275.0	41.0	5.3	375.0	36.0	6.7	460.0	62.0
		2.1	193.0	11.4	3.4	265.0	23.0	3.9	300.0	27.0	5.6	405.0	26.0	7.0	495.0	52.0
		2.3	205.0	7.6	3.5	280.0	18.5	4.1	310.0	23.0	6.0	435.0	18.9			
					3.7	290.0	14.8	4.2	320.0	18.9	6.3	460.0	13.6			
								4.4	335.0	15.9						

AL 45 - Internal Mix

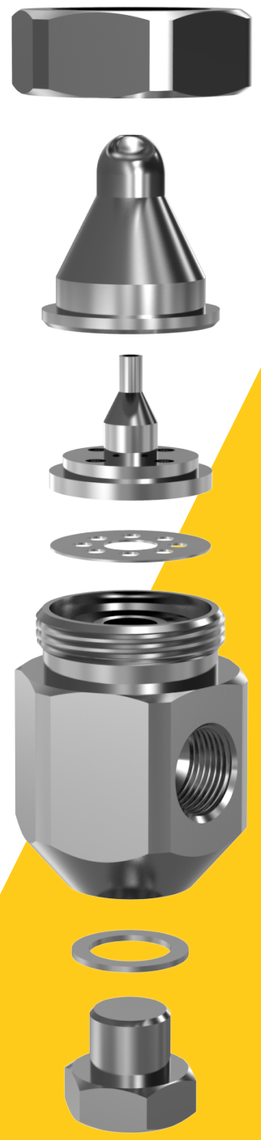

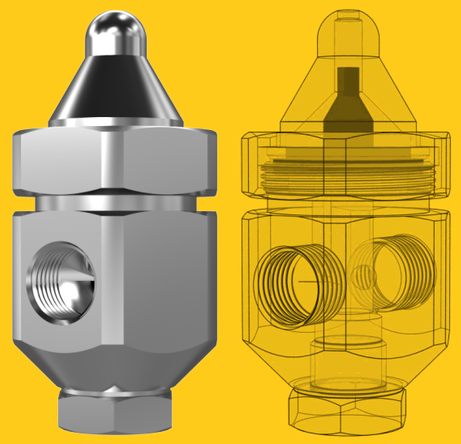

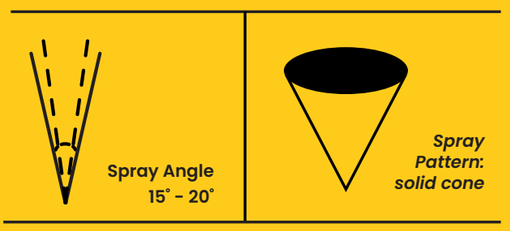

The AL 45 series produces a narrow angle spray pattern with a nominal angle of 15°–20°. This is an internal mix nozzle, where a change in air or liquid pressure will result in a change of flow or atomization. Increasing air pressure decreases flow and increases atomization. Increasing liquid pressure decreases flow and increases atomization. Increasing liquid pressure increases and decreases atomization.

AL 45 Narrow Angle Internal Mix

Metering Set	Liquid Tip & Aircap	Liquid Pressure Bar. G.														
		0.7 BAR			1.5 BAR			2.0 Bar			3.0 Bar			4.0 Bar		
		Air Press. BAR	Air L/Min	Liquid L/Hr	Air Press. BAR	Air L/Min	Liquid L/Hr	Air Press. BAR	Air L/Min	Liquid L/Hr	Air Press. BAR	Air L/Min	Liquid L/Hr	Air Press. BAR	Air L/Min	Liquid L/Hr
45-01	LIQUID TIP W13154-2 AIRCAP W13156-1	0.7	15.6	2.5	1.1	11.9	6.4	1.4	13.9	6.4	2.7	23.0	6.2	3.5	28.0	7.8
		0.9	19.0	1.8	1.4	15.0	5.0	1.7	16.7	5.5	2.8	25.0	5.7	3.7	29.0	7.3
		1.0	22.0	1.4	1.7	18.7	4.1	2.0	19.8	4.5	3.0	27.0	5.2	3.9	33.0	6.4
					1.8	20.0	3.4	2.2	24.0	3.4	3.1	29.0	4.7	4.2	38.0	5.5
					2.0	23.0	3.0	2.4	26.0	3.0	3.2	31.0	4.3	4.5	43.0	4.5
					2.1	25.0	2.6	2.5	28.0	2.5	3.4	33.0	3.9	4.6	45.0	4.1
						27.0	2.0	2.7	31.0	2.3	3.7	38.0	3.0	4.8	47.0	3.7
45-02	LIQUID TIP W13154-2 AIRCAP W13156-2	0.7	18.7	2.5	1.4	27.0	5.7	1.7	29.0	6.7	2.2	34.0	9.2	2.8	39.0	11.9
		0.9	22.0	2.0	1.5	29.0	5.2	1.8	31.0	6.4	2.5	39.0	8.2	3.1	43.0	11.0
		1.0	26.0	1.6	1.7	32.0	4.8	2.0	34.0	5.9	2.8	44.0	7.2	3.4	47.0	11.0
					1.8	35.0	4.3	2.1	37.0	5.2	3.0	47.0	6.7	3.7	52.0	9.2
					2.0	37.0	3.9	2.2	40.0	4.8	3.1	49.0	6.3	3.9	58.0	8.4
					2.1	40.0	3.4	2.4	43.0	4.3	3.2	52.0	5.9	4.2	58.0	7.6
								2.7	48.0	3.6	3.4	55.0	5.5	4.5	68.0	6.8
45-03	LIQUID TIP W13156-2 AIRCAP W13156-2	0.9	21.0	4.8	1.7	31.0	8.4	2.0	33.0	10.7	2.7	37.0	16.5	3.4	43.0	20.0
		1.1	27.0	4.1	1.8	35.0	7.5	2.1	37.0	9.8	2.8	38.0	15.4	3.7	47.0	18.4
		1.4	33.0	3.4	2.0	37.0	7.0	2.4	42.0	8.2	3.1	43.0	13.6	3.9	50.0	16.8
		1.5	35.0	3.1	2.2	44.0	5.7	2.7	48.0	6.8	3.4	49.0	11.8	4.2	55.0	15.2
		1.7	39.0	3.0	2.5	49.0	4.8	3.0	55.0	5.9	3.7	55.0	10.4	4.5	60.0	13.8
		1.8	41.0	2.9	2.8	54.0	4.1	3.2	59.0	5.0	3.9	61.0	9.1	4.8	65.0	12.4
		2.0	44.0	2.8	3.1	59.0	3.6	3.5	65.0	4.1	4.2	65.0	7.9	4.9	68.0	11.8
45-04	LIQUID TIP W13154-5 AIRCAP W13156-3	1.1	76.0	13.0	2.2	116.0	17.8	2.8	136.0	20.0	3.4	149.0	32.0	4.6	193.0	37.0
		1.4	91.0	8.9	2.5	130.0	13.1	3.1	149.0	16.3	3.9	170.0	25.0	5.3	220.0	29.0
		1.5	98.0	7.2	2.8	143.0	9.5	3.4	163.0	11.9	4.6	205.0	15.9	5.6	235.0	25.0
		1.7	105.0	5.8	3.1	157.0	7.0	3.9	187.0	7.0	5.3	240.0	9.1	6.0	250.0	21.0
		1.8	112.0	4.7	3.4	171.0	4.9	4.2	205.0	4.7	5.6	255.0	6.8	6.3	270.0	17.4
		2.0	119.0	3.6	3.5	178.0	4.2	4.6	220.0	3.0	6.0	275.0	5.0	6.7	290.0	14.0
		2.1	127.0	2.7							6.3	290.0	3.6	7.0	305.0	11.0
45-05	LIQUID TIP W13154-6 AIRCAP W13156-3	0.9	57.0	31.0	1.4	69.0	61.0	2.1	96.0	53.0	2.7	103.0	80.0	3.8	135.0	88.0
		1.0	66.0	25.0	1.5	76.0	54.0	2.4	96.0	41.0	3.0	117.0	69.0	4.2	156.0	73.0
		1.1	75.0	18.5	1.7	85.0	48.0	2.7	127.0	31.0	3.2	130.0	59.0	4.6	176.0	61.0
		1.3	85.0	12.9	1.8	93.0	41.0	2.8	136.0	26.0	3.5	146.0	49.0	4.9	196.0	48.0
					2.0	102.0	35.0	3.0	144.0	22.0	3.7	154.0	44.0	5.3	215.0	39.0
					2.1	110.0	30.0				3.8	161.0	37.0	5.6	240.0	31.0
					2.2	119.0	25.0				3.9	170.0	35.0	6.0	260.0	23.0
45-06	LIQUID TIP W13154-10 AIRCAP W13156-4	1.0	86.0	44.0	1.4	19.0	125.0	2.0	108.0	123.0	2.2	88.0	199.0	3.0	99.0	250.0
		1.1	102.0	32.0	1.5	91.0	106.0	2.1	119.0	108.0	2.5	110.0	174.0	3.2	120.0	225.0
					1.7	105.0	87.0	2.2	130.0	95.0	2.8	133.0	146.0	3.5	141.0	205.0
					1.8	118.0	70.0	2.4	143.0	79.0	3.1	154.0	121.0	3.8	163.0	182.0
					2.0	130.0	55.0	2.5	155.0	64.0	3.2	166.0	108.0	4.1	184.0	159.0
								2.7	166.0	52.0	3.4	176.0	95.0	4.6	225.0	121.0
								2.8	178.0	42.0	3.5	187.0	84.0	4.9	255.0	93.0

AL 60 – Internal Mix

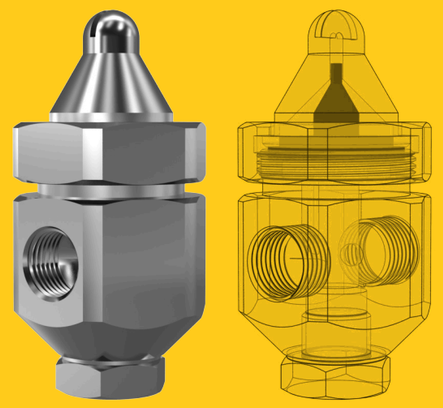

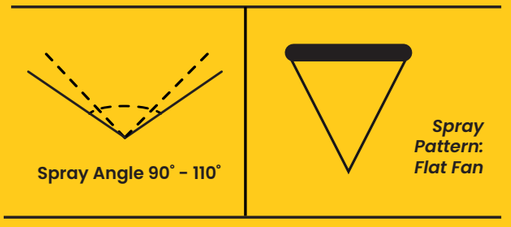

The AL 60 series produces a wide angle flat fan spray pattern with a nominal angle of 90º–110º. This is an internal mix nozzle, where a change in air or liquid pressure will result in a change of flow or atomization. Increasing air pressure decreases flow and increases atomization. Increasing liquid pressure increases flow and decreases atomization.

AL 60 Flat Spray Internal Mix

Metering Set	Liquid Tip & Aircap	Liquid Pressure Bar. G.														
		0.7 BAR			1.5 BAR			2.0 Bar			3.0 Bar			4.0 Bar		
		Air Press. BAR	Air L/Min	Liquid L/Hr	Air Press. BAR	Air L/Min	Liquid L/Hr	Air Press. BAR	Air L/Min	Liquid L/Hr	Air Press. BAR	Air L/Min	Liquid L/Hr	Air Press. BAR	Air L/Min	Liquid L/Hr
60-01	LIQUID TIP W13154-2 AIRCAP W13158-2	0.7	24.0	5.5	1.3	31.0	9.1	2.0	42.0	8.6	2.7	52.0	11.2	3.9	69.0	12.0
		0.9	27.0	4.7	1.5	36.0	7.7	2.2	47.0	7.5	3.0	56.0	10.1	4.6	81.0	9.7
		1.0	31.0	4.1	1.8	42.0	6.5	2.5	52.0	6.2	3.2	62.0	9.1	5.3	93.0	7.5
		1.1	34.0	3.5	2.1	47.0	5.4	2.8	57.0	5.2	5.5	66.0	8.1	6.0	104.0	5.3
		1.3	37.0	3.0	2.4	52.0	4.3	3.1	63.0	4.2	4.2	79.0	5.4	6.3	110.0	4.3
		1.4	40.0	2.5	2.7	57.0	3.3	3.2	65.0	3.7	4.6	85.0	4.2	6.7	116.0	3.3
		1.5	44.0	2.0	2.8	60.0	2.8	3.4	68.0	3.2	4.9	91.0	3.1	7.0	122.0	2.4
60-02	LIQUID TIP W13154-3 AIRCAP W13158-2	0.9	19.8	8.2	1.4	27.0	14.4	2.1	36.0	13.5	2.7	42.0	19.1	4.6	69.0	16.1
		1.0	23.0	6.8	1.7	32.0	11.9	2.4	42.0	11.4	3.0	46.0	17.1	4.9	76.0	13.8
		1.1	27.0	5.5	2.0	37.0	9.5	2.7	47.0	9.2	3.2	52.0	15.1	5.3	83.0	11.5
		1.3	30.0	4.1	2.1	40.0	8.3	3.0	53.0	7.1	3.5	57.0	13.1	5.6	90.0	9.3
		1.4	34.0	2.9	2.2	43.0	7.1	3.2	59.0	5.0	4.2	72.0	8.1	6.0	97.0	7.3
					2.4	46.0	6.1	3.4	63.0	4.0	4.8	79.0	5.9	6.3	104.0	5.6
					2.5	49.0	5.1	3.5	66.0	3.3	4.9	86.0	4.0	6.7	112.0	4.3
60-03	LIQUID TIP W13154-3 AIRCAP W13158-3	1.0	25.0	9.0	2.0	41.0	10.4	2.4	48.0	11.6	3.1	56.0	15.6	4.2	73.0	17.1
		1.1	30.0	7.8	2.1	45.0	9.3	2.5	51.0	10.4	3.2	59.0	14.6	4.6	80.0	15.0
		1.3	32.0	6.6	2.2	48.0	8.2	2.7	54.0	9.4	3.4	62.0	13.7	4.9	87.0	12.8
		1.4	36.0	5.2	2.5	55.0	6.1	3.0	61.0	7.3	3.8	71.0	10.8	5.3	94.0	11.0
		1.7	44.0	3.1	2.8	62.0	4.3	3.2	68.0	5.5	4.2	82.0	8.5	5.6	103.0	9.4
		2.0	50.0	2.0	3.1	69.0	3.0	3.5	75.0	4.1	4.9	98.0	5.2	6.3	119.0	7.2
		2.2	56.0	1.1	3.4	75.0	2.0	3.8	81.0	2.9	6.0	120.0	2.3	7.0	134.0	6.1
60-04	LIQUID TIP W13154-3 AIRCAP W13158-1	1.3	30.0	3.9	2.1	40.0	7.4	3.0	52.0	6.1	3.9	60.0	9.4	5.3	78.0	10.2
		1.4	33.0	3.0	2.4	45.0	5.3	3.1	54.0	5.3	4.2	67.0	7.2	5.6	84.0	8.3
		1.5	35.0	2.3	2.5	47.0	4.4	3.2	57.0	4.5	4.6	73.0	5.3	6.0	89.0	6.6
		1.7	38.0	1.8	2.7	50.0	3.7	3.4	59.0	3.8	4.9	80.0	3.8	6.3	98.0	5.1
		1.8	41.0	1.3	2.8	52.0	3.1	3.5	62.0	3.2						
		2.0	44.0	1.0	3.0	55.0	2.6	3.9	68.0	1.8						
					3.1	57.0	2.1									
60-05	LIQUID TIP W13154-6 AIRCAP W13158-5	1.0	23.0	17.0	2.0	44.0	24.0	2.4	51.0	28.0	3.4	72.0	38.0	3.9	75.0	65.0
		1.1	27.0	11.0	2.1	50.0	18.9	2.5	59.0	23.0	3.5	80.0	33.0	4.2	89.0	53.0
		1.3	33.0	7.6	2.2	56.0	14.4	2.7	66.0	18.9	3.7	89.0	28.0	4.6	108.0	40.0
		1.4	40.0	3.2	2.4	63.0	10.6	2.8	74.0	15.1	3.8	97.0	23.0	4.9	127.0	30.0
					2.5	71.0	7.2	3.0	79.0	11.7	3.9	105.0	19.7	5.3	149.0	21.0
											4.2	120.0	13.1	5.6	173.0	13.8
											4.6	138.0	7.2	6.3	225.0	3.2
60-06	LIQUID TIP W13154-5 AIRCAP W13158-4	1.1	54.0	11.2	2.1	79.0	18.0	2.7	93.0	19.6	3.5	112.0	27.0	4.6	137.0	33.0
		1.3	60.0	8.5	2.2	84.0	15.8	2.8	98.0	17.3	3.7	116.0	25.0	4.9	149.0	28.0
		1.4	65.0	6.5	2.4	89.0	13.6	3.0	103.0	15.2	3.8	121.0	23.0	5.3	161.0	24.0
		1.5	71.0	5.0	2.5	95.0	11.6	3.1	109.0	13.2	3.9	128.0	21.0	5.6	174.0	19.7
		1.7	77.0	3.8				3.2	114.0	11.4	4.1	132.0	18.9	6.0	187.0	15.7
											4.2	137.0	17.0	6.3	200.0	12.4
60-07	LIQUID TIP W13154-6 AIRCAP W13158-4	0.9	33.0	27.0	1.8	55.0	38.0	2.1	67.0	39.0	3.2	76.0	58.0	4.6	106.0	59.0
		1.0	38.0	20.0	2.1	66.0	28.0	2.2	77.0	30.0	3.5	87.0	47.0	5.3	132.0	140.0
		1.1	45.0	15.9	2.2	71.0	24.0	2.4	87.0	24.0	3.8	97.0	38.0	5.6	145.0	125.0
		1.3	48.0	12.5	2.4	76.0	21.0	2.5	98.0	17.8	3.9	103.0	34.0	6.0	158.0	89.0
		1.4	56.0	10.2	2.5	82.0	17.8	2.7	103.0	15.1	4.2	113.0	27.0	6.3	172.0	58.0
		1.5	62.0	7.6	2.7	87.0	15.1		109.0	12.9	4.6	126.0	20.0	6.7	185.0	34.0
									114.0	10.6	4.9	140.0	14.8	7.0	198.0	16.7
60-08	LIQUID TIP W13154-10 AIRCAP W13158-6	1.0	90.0	29.0	1.8	117.0	56.0	2.1	119.0	100.0	3.0	140.0	126.0	4.1	181.0	140.0
		1.1	108.0	18.9	2.0	133.0	40.0	2.2	133.0	79.0	3.1	151.0	110.0	4.2	193.0	125.0
								2.4	147.0	62.0	3.2	163.0	95.0	4.2	225.0	89.0
								2.5	162.0	48.0	3.4	184.0	78.0	4.9	165.0	58.0
								2.7	177.0	36.0	3.5	193.0	62.0	5.3	305.0	34.0
											3.7	210.0	48.0	5.6	340.0	16.7
											3.8	225.0	37.0			

VCN™ Manifolds, Air Atomising Lances and Bespoke Nozzles

Modular Manifold Systems

Modular systems are the latest, most forward-thinking method for tablet processes, which involve completely new design challenges.

- All pipework is incorporated within the manifold to reduce air turbulence.
- Gun spacing is set by interchangeable spacers.
- Fully sealed units reduce cleaning downtime.
- Recirculating systems can be incorporated within the design.
- Interchanging gun parts reduce chance of leaking.
- Wide range of fitting options.

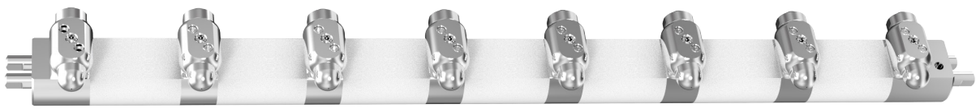

To complement our existing range of VCNs, we have produced a manifold with the following benefits.

- Compact manifold and nozzle designs eliminate external feed pipes, reducing complexity over traditional spray manifolds.
- Designs available to suit single or multiple nozzle set ups.
- Uses lightweight materials to reduce the overall weight of the nozzle assembly for ease of maintenance and installation.
- Various inlet connections and designs available to suit specific requirements.
- Manufactured to the same high quality as our standard Variable Coating Nozzles.
- Metering set combinations available for the full range of Variable Coating Nozzles (0.8mm - 2.3mm).

Multi Head Fluid Bed Nozzle

Using our knowledge of air assisted atomization, we have developed several multi head nozzles for use in fluid bed coating. We can currently supply 3 and 6 nozzle variations depending on the application required.

Top View

Manifold Systems from Consultation to Commission

Our team of Air Atomizing specialists can work with your engineers our users to discover the best solutions to retrofitting a complete manifold system to your existing coater. With their experience in manifold design and updating and replacing coating arms in existing manufacturing sites, our CAD engineers are ideally suited to modernizing the most important part of the coating process.

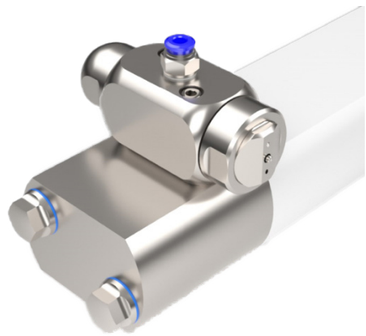

Swirl-Air™ Product Line

RIGHT ANGLE VERSION

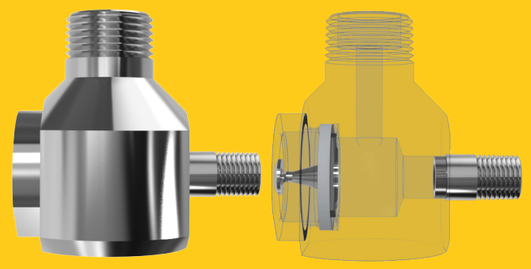

Materials: Stainless Steel 316L/310 • 440 HSS • Hastelloy • Inconel •Titanium

Flow Rate: 0.2-40 GPM

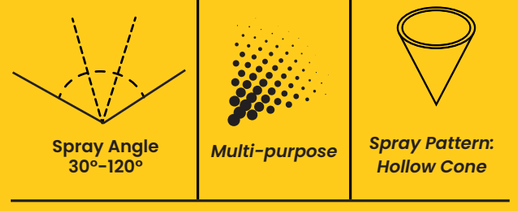

VARIOUS LANCE CONFIGURATIONS AVAILABLE

RIGHT ANGLE CONCENTRIC INLET

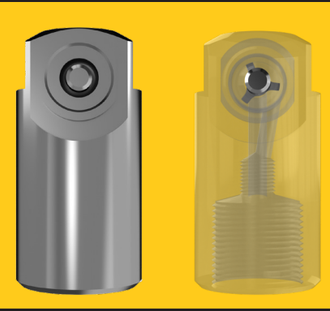

Materials: Stainless Steel 316L/310 • 440 HSS • Hastelloy • Inconel •Titanium

Flow Rate: 0.2-40 GPM

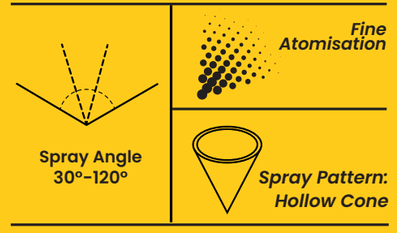

VARIOUS LANCE CONFIGURATIONS AVAILABLE

INLINE VERSION

Materials: Stainless Steel 316L/310 • 440 HSS • Hastelloy • Inconel •Titanium

Flow Rate: 0.2-40 GPM

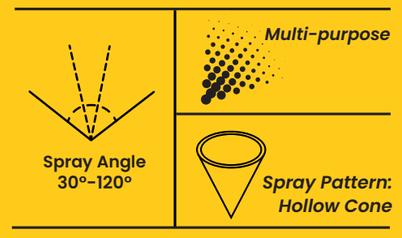

VARIOUS LANCE CONFIGURATIONS AVAILABLE

CARBIDE LINED VERSION

Materials: Stainless Steel 316L/310 • 440 HSS • Hastelloy • Inconel •Titanium

Flow Rate: 0.2-40 GPM

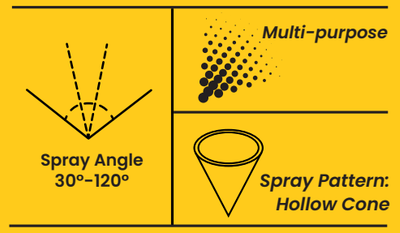

VARIOUS LANCE CONFIGURATIONS AVAILABLE

With the Swirl-Air™, We Mastered Finely Atomized Spray at Low Pressures.

The Delavan Swirl-Air™ range of spray nozzles, based on aerospace technology and developed within our Gas Turbine Division, was designed to maximize hydraulic and pneumatic energy to atomise liquids at relatively low pressures. Originally designed for use in evaporative cooling, spray drying, and combustion, they have since been used in many other industrial applications from food to steel production. Different spray angles are available. Flow rates can be changed by adjusting air and liquid pressure and the degree of atomization controlled by changes in the air-to-liquid volume ratio.

Multiple Configurations.

Two installation configurations are available. In the right angle nozzle, atomizing air enters the side and the liquid enters axially in the back. With the in-line nozzle, concentric piping is used with the liquid in the center and atomizing air entering around the outside. Concentric pipe adapter assemblies are optional and are not included with the nozzle assembly as standard. Our specialist design team can also provide customized designs for your own applications.

DELAVAN®
SPRAY TECHNOLOGIES

Nozzle Application Enquiry Form

Name		**E-Mail**	
Company		**Telephone Number**	
Address		**Fax Number**	

To specify any type of nozzle it is essential to provide several pieces of information:	
Flow Rate:	
which can be given in a variety of units such as:	• Litres per minute • M^3/hour • Gallons per minute (specify US or Imp) • Kg per hour (density will be required if different from water)

Operating Pressure:	
which can be given in a variety of units such as:	• Bar.G. • Kg/cm^2 • Head in Metres or Feet • P.S.I.G. • kPa (Kilo Pascals)

Spray Angle:	
Type of Spray Pattern:	• Flat • Hollow Cone • Solid Cone/Circular or Square • Air Atomizing

Liquid Being Sprayed:	
If different from water the following are required:	• Density:
	• Surface Tension:
	• Viscosity:
	• Solids Content:

Application or Purpose of Nozzle (not always necessary) e.g.	• Washing/Rinsing • Gas Scrubbing • Aeration of Liquids • Gas Cooling - Separate Enquiry Sheet Required • Spray Drying - Separate Enquiry Sheet Required • Cleaning in Place • Quenching • De-Scaling • Humidification

Delavan® Ltd, Gorsey Lane, Widnes, Cheshire WA8 0RJ, England
Tel: +44 (0) 151 424 6821 • Fax: +44 (0) 151 495 1043
E-mail: sales@delavan.co.uk • Web: delavan.com

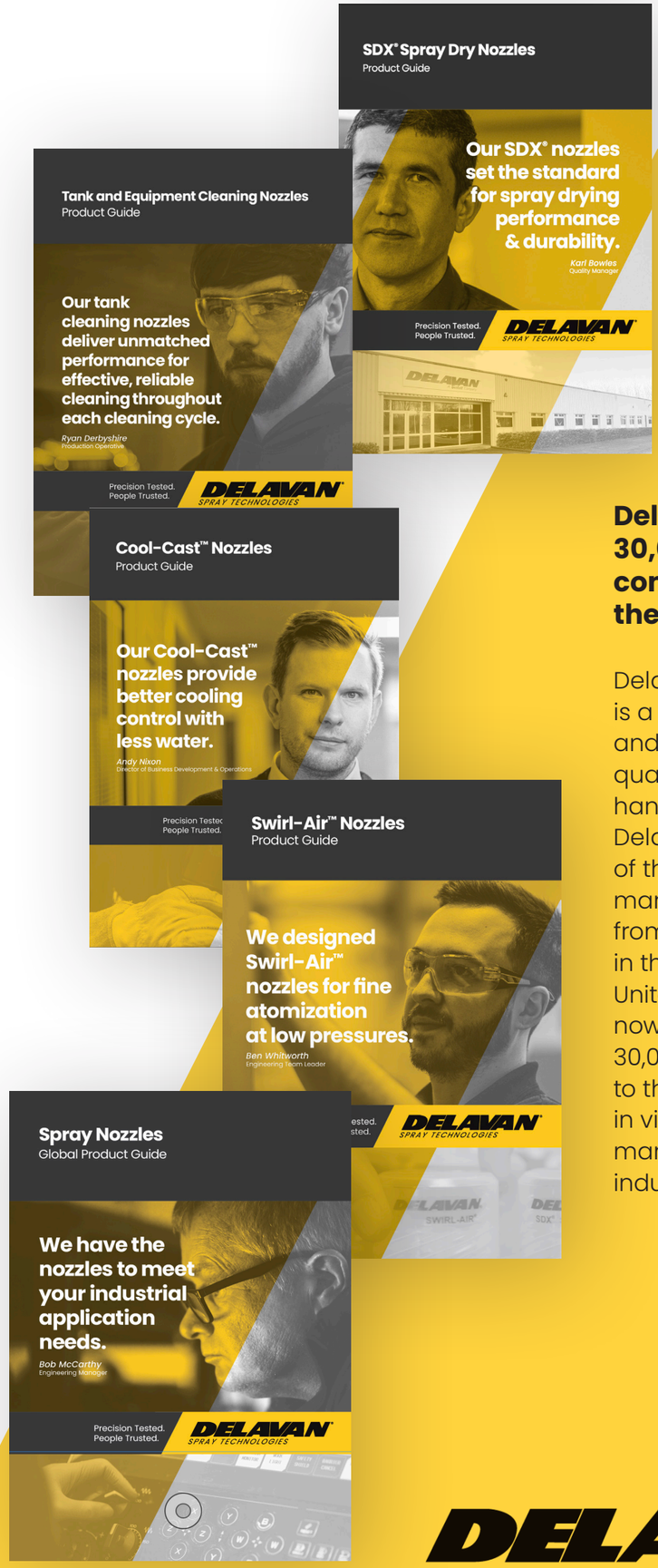

Delavan® offers over 30,000 different components across their product lines.

Delavan®, a Beckett Company, is a world leader in the design and manufacture of high-quality spray nozzles and fluid handling systems. Since 1935, Delavan® has grown to be one of the leading spray nozzle manufacturers. Operating from manufacturing facilities in the United States and in the United Kingdom, Delavan® now supplies more than 30,000 different components to thousands of customers in virtually every imaginable manufacturing and processing industry. Visit us at delavan.com.

DELAVAN® SPRAY TECHNOLOGIES

Delavan®, part of R.W. Beckett, is a world leader in the design and manufacture of high quality spray nozzles and fluid handling systems. Since 1935, we have grown to be one of the leading spray nozzle manufacturers. Operating from dedicated manufacturing facilities, Delavan® now supplies more than 30,000 different components to thousands of customers in virtually every manufacturing and processing industry. Our success has been driven by our outstanding service, our manufacturing flexibility, and our technical application expertise to ensure our customers obtain the maximum benefit from the solutions they choose.

Precision Tested.
People Trusted.

DELAVAN®
SPRAY TECHNOLOGIES

For more information on our products and help connecting with a distributor near you, visit ***delavan.com*** or contact us at:

Phone: **+44 (0)151 424 6821**
Fax: **+44 (0)151 495 1043**

Inside USA Toll Free:
Phone: **1-877-GO DELAVAN**
Fax: **1-877-DELAFAX**

General Inquiries: ***sales@delavan.co.uk***

bsi ISO 9001 Quality Management Systems CERTIFIED ISO 14001 Environmental Management CERTIFIED

FM 523589